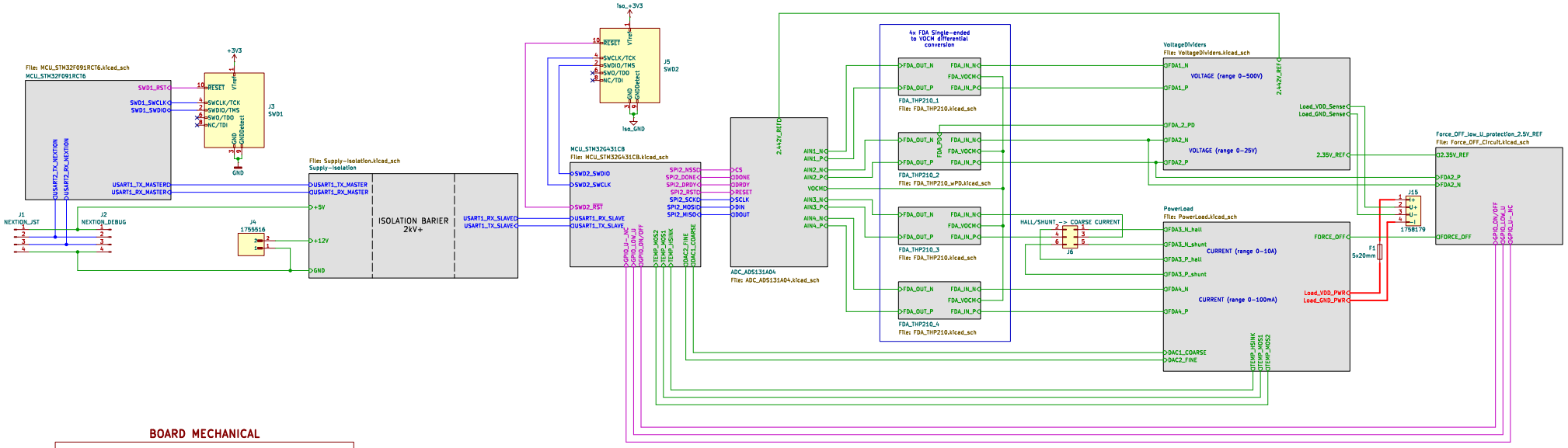

BOARD MECHANICAL

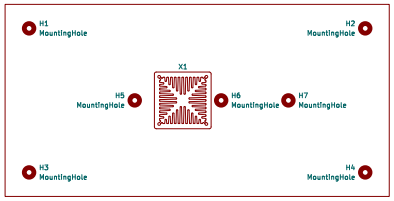

Sheet: /		
File: M2E_ELoad.kicad_sch		
Title:		
Size: A2	Date:	Rev:
KiCad E.D.A. 9.0.6		Id: 1/12

24bit 4ch ΔΣ SPI ADC simultaneous sampling up to 128 kSps

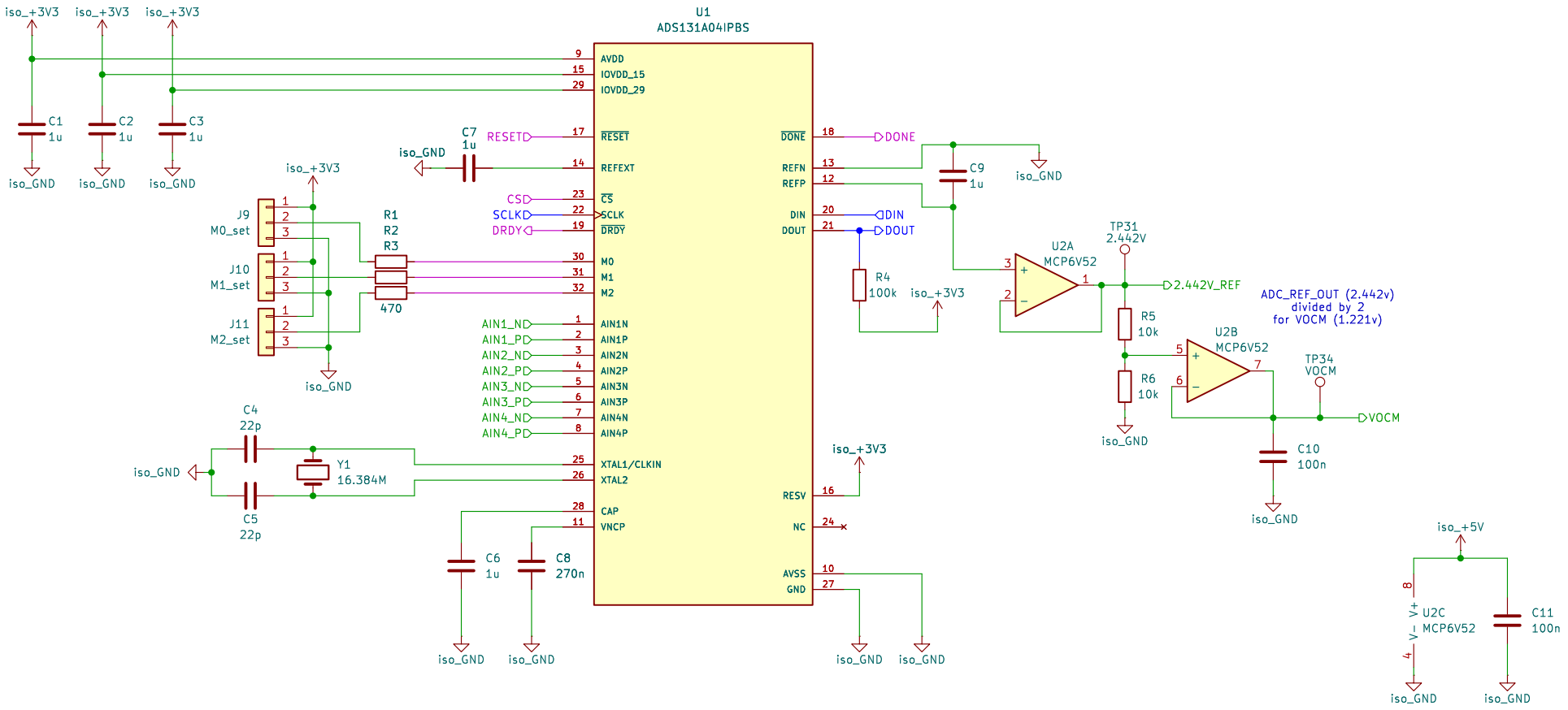

Sheet: /ADC_ADS131A04/
File: ADC_ADS131A04.kicad_sch

Title:

Size: A4	Date:	Rev:
KiCad E.D.A. 9.0.6		Id: 2/12

Low offset Full Differential Amplifier (FDA)

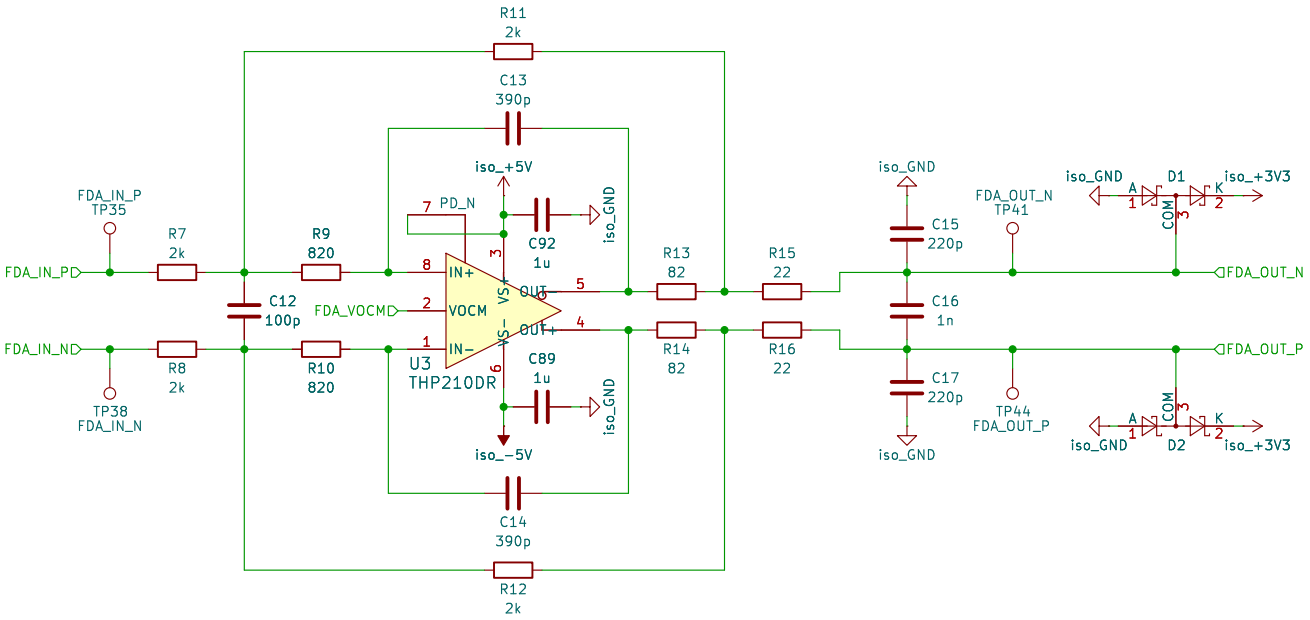

Sheet: /FDA_THP210_1/
File: FDA_THP210.kicad_sch

Title:

Size: A4	Date:	**Rev:**
KiCad E.D.A. 9.0.6		Id: 3/12

Low offset Full Differential Amplifier (FDA)

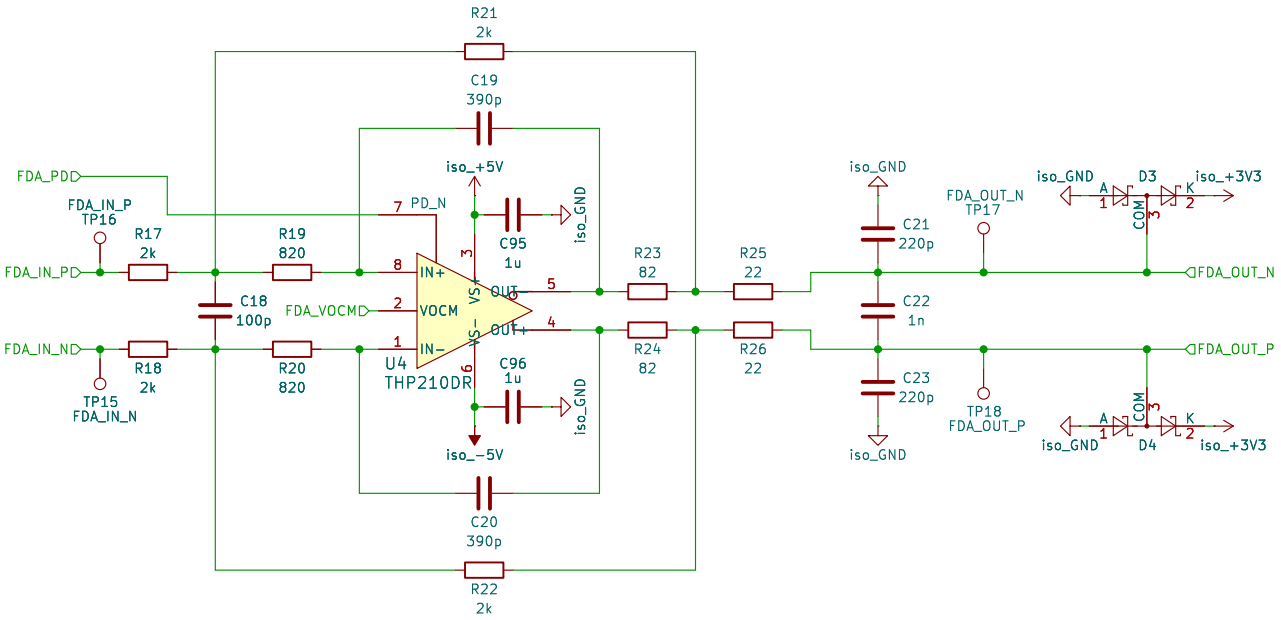

Sheet: /FDA_THP210_2/
File: FDA_THP210_wPD.kicad_sch

Title:

Size: A4	Date:	**Rev:**
KiCad E.D.A. 9.0.6		Id: 4/12

Low offset Full Differential Amplifier (FDA)

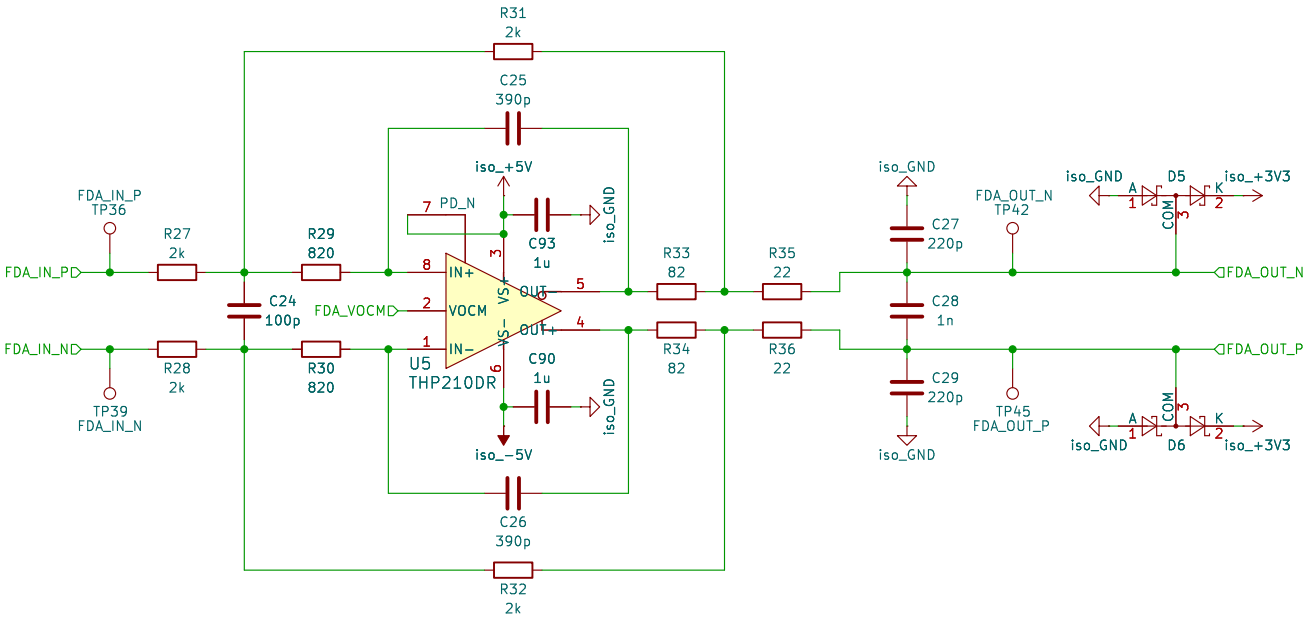

Sheet: /FDA_THP210_3/
File: FDA_THP210.kicad_sch

Title:

Size: A4	Date:	Rev:
KiCad E.D.A. 9.0.6		Id: 5/12

Low offset Full Differential Amplifier (FDA)

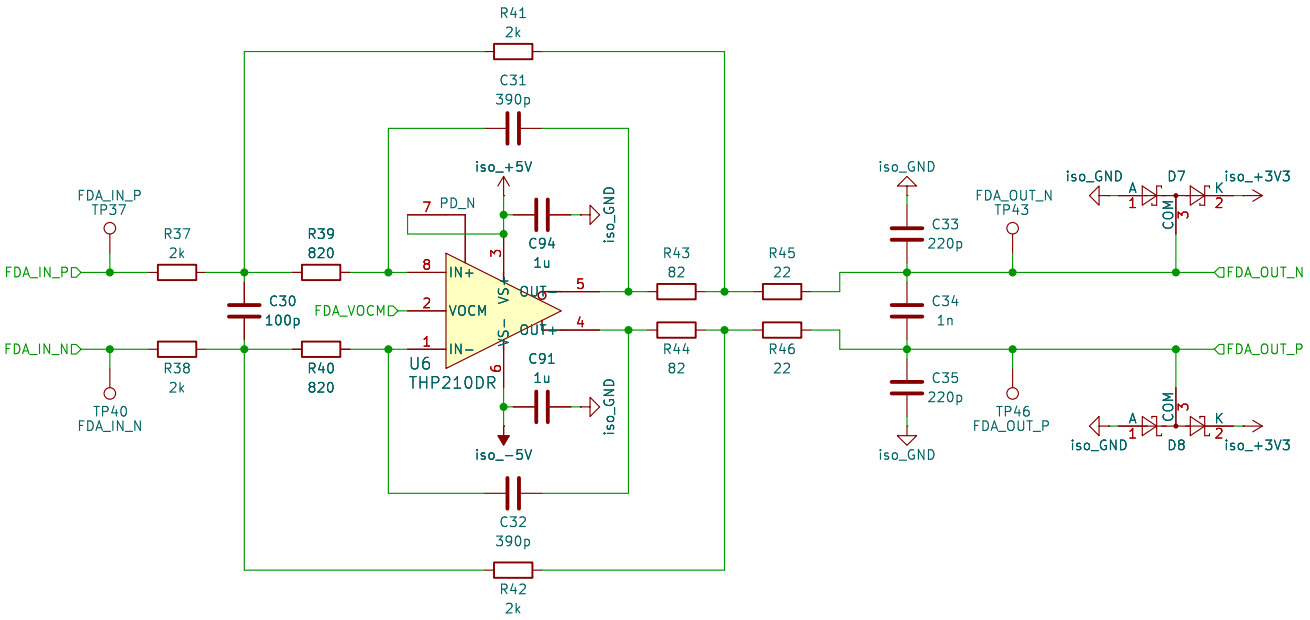

Sheet: /FDA_THP210_4/
File: FDA_THP210.kicad_sch

Title:

Size: A4	Date:	Rev:
KiCad E.D.A. 9.0.6		Id: 6/12

SLAVE MCU – STM32G431CBT

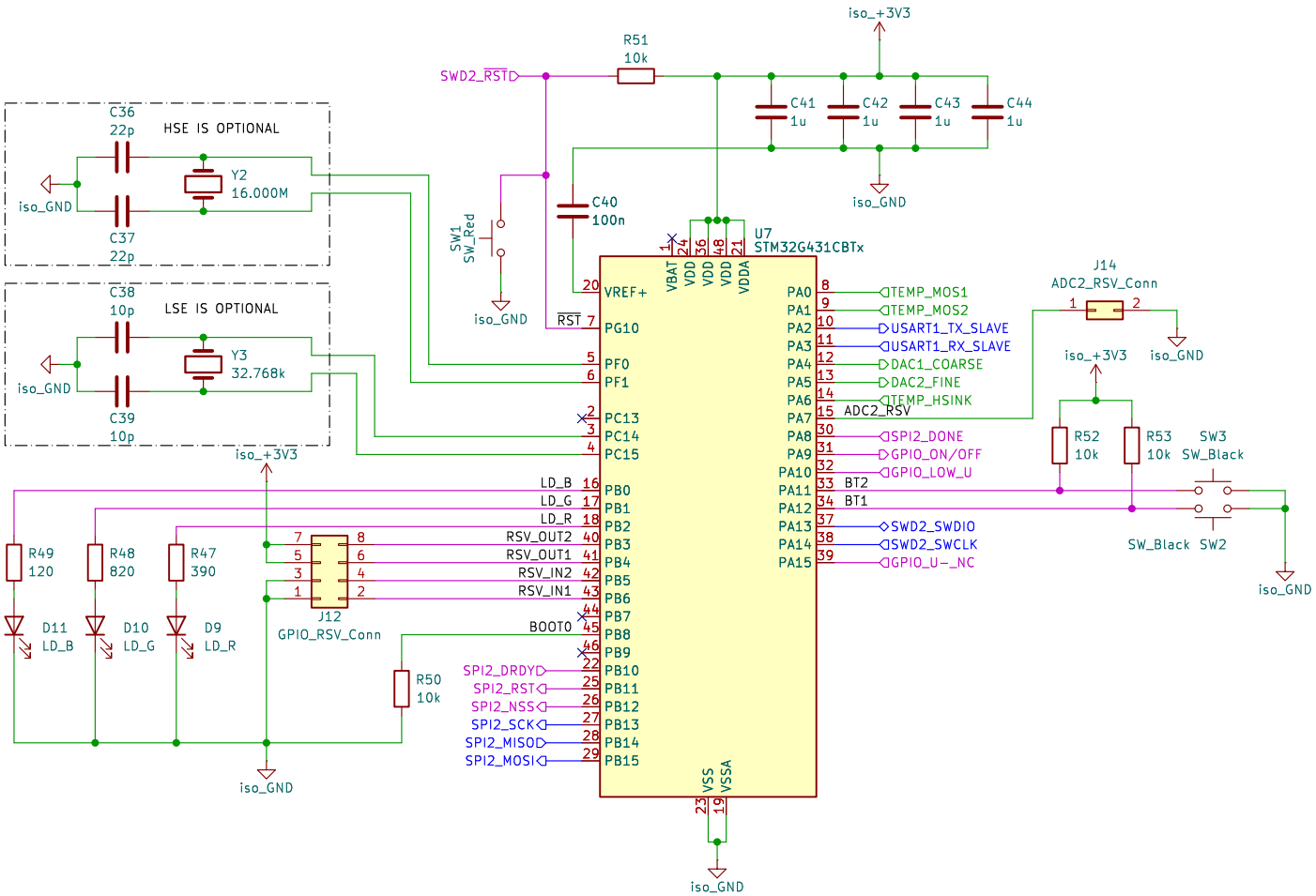

Sheet: /MCU_STM32G431CB/
File: MCU_STM32G431CB.kicad_sch

Title:

Size: A4	Date:	Rev:
KiCad E.D.A. 9.0.6		Id: 7/12

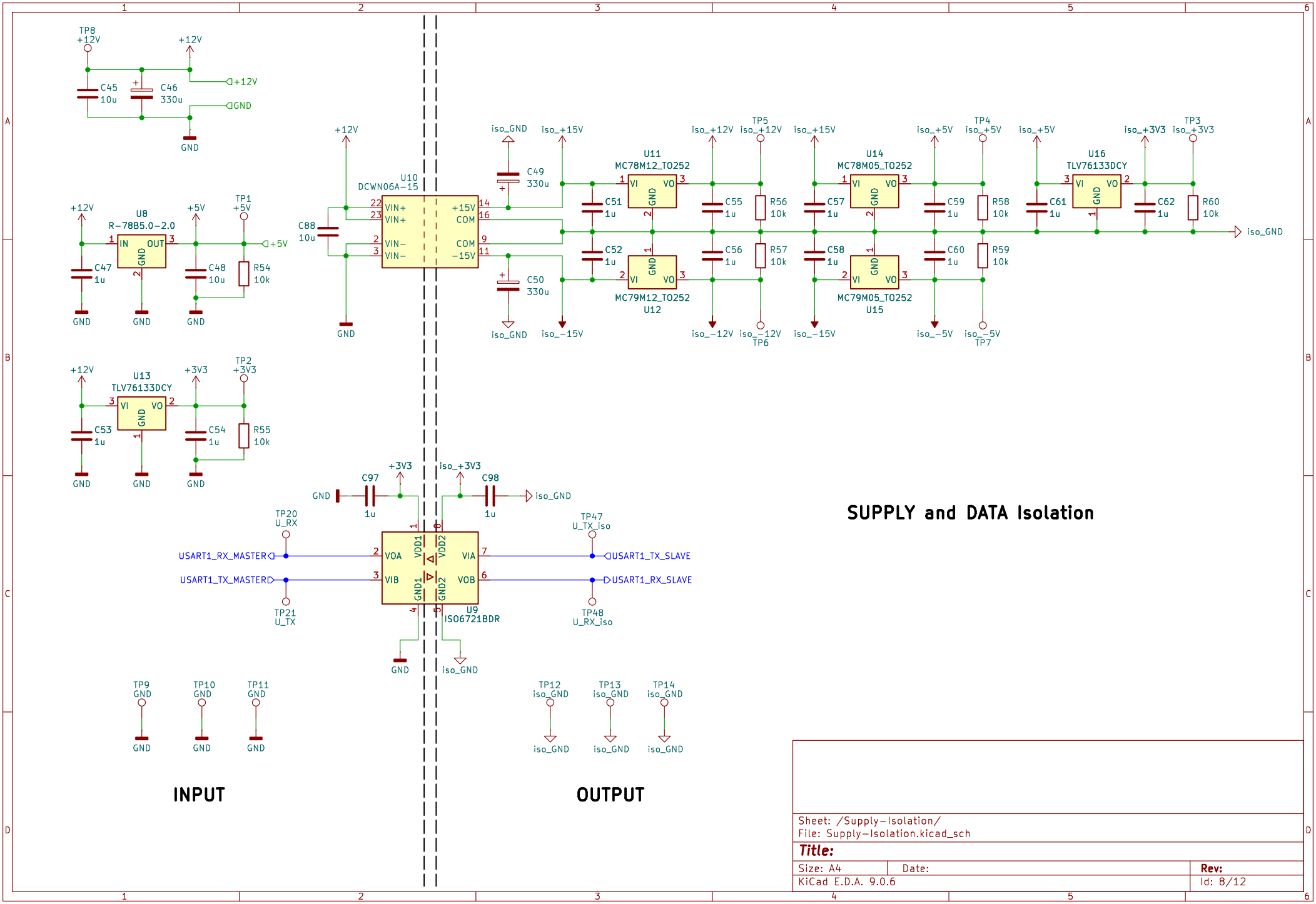

Sheet: /Supply-Isolation/
File: Supply-Isolation.kicad_sch

Title:

Size: A4	Date:	Rev:
KiCad E.D.A. 9.0.6		Id: 8/12

POWER LOAD, current signal amplifiers
coarse current hall sense, temperature sensors

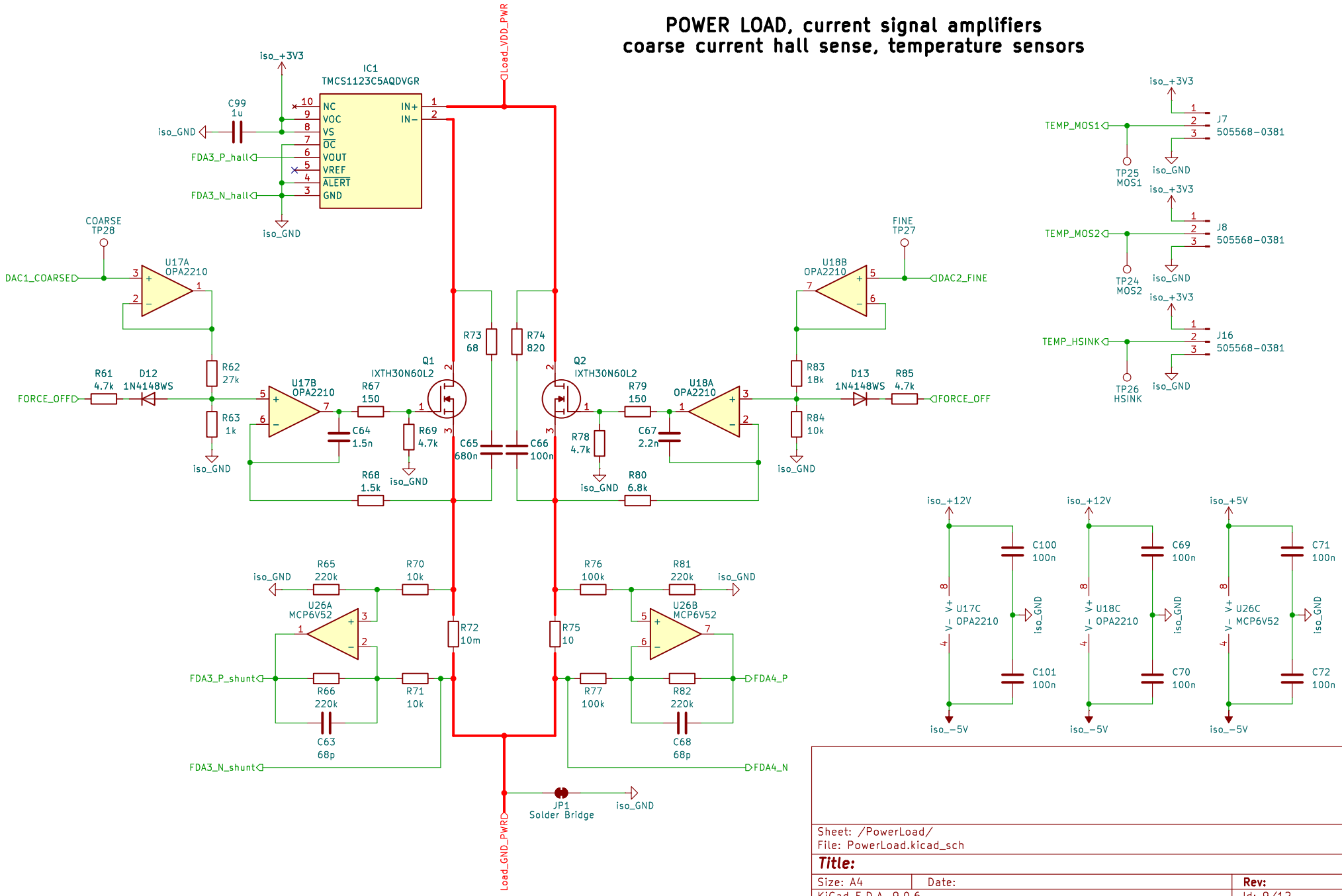

Sheet: /PowerLoad/
File: PowerLoad.kicad_sch

Title:

Size: A4	Date:	Rev:
KiCad E.D.A. 9.0.6		Id: 9/12

VOLTAGE DIVIDERS

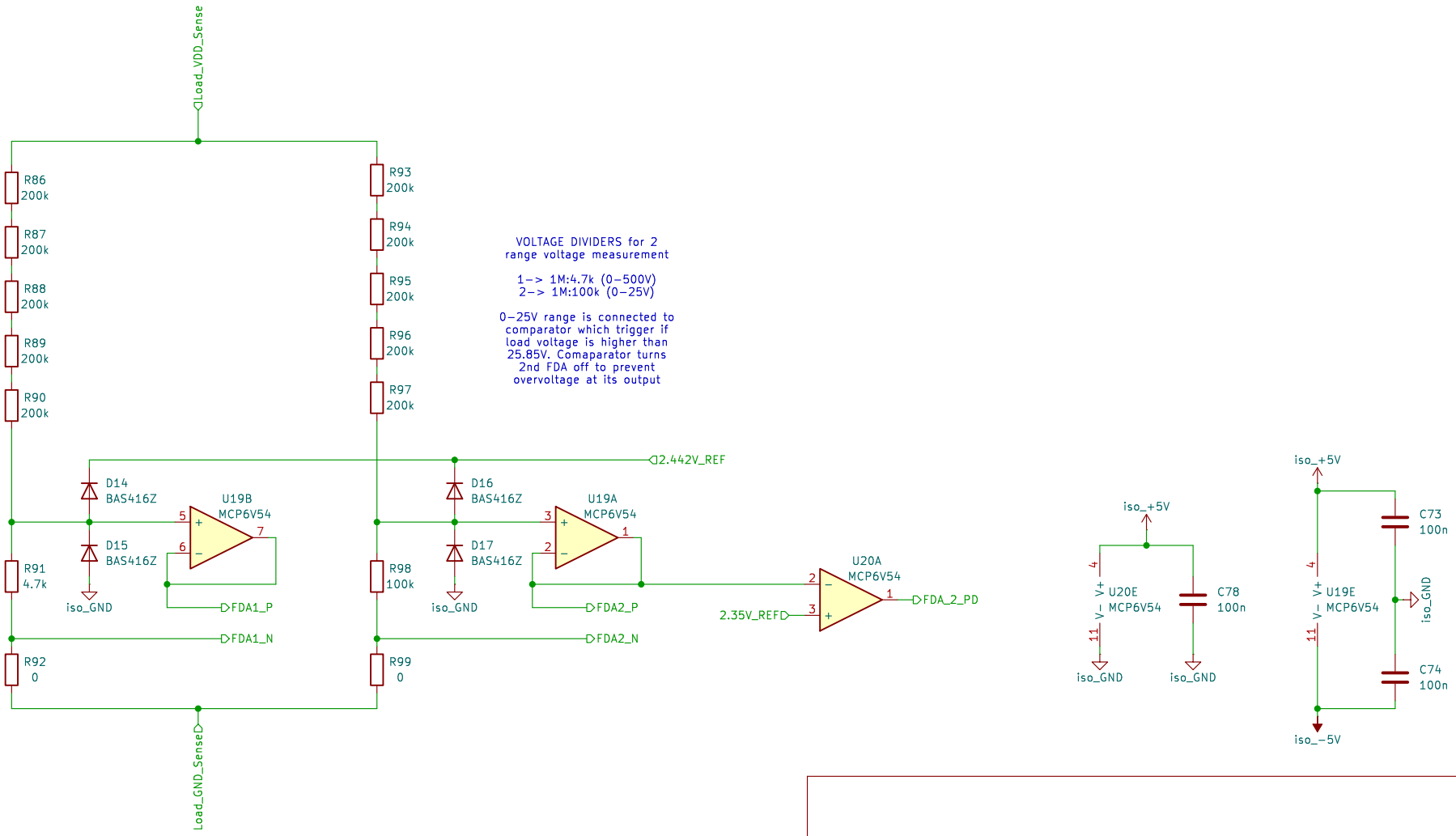

Sheet: /VoltageDividers/
File: VoltageDividers.kicad_sch

Title:

Size: A4	Date:	Rev:
KiCad E.D.A. 9.0.6		Id: 10/12

2.5V low drift REF, FORCE OFF and low Load voltage protection (<500mV)

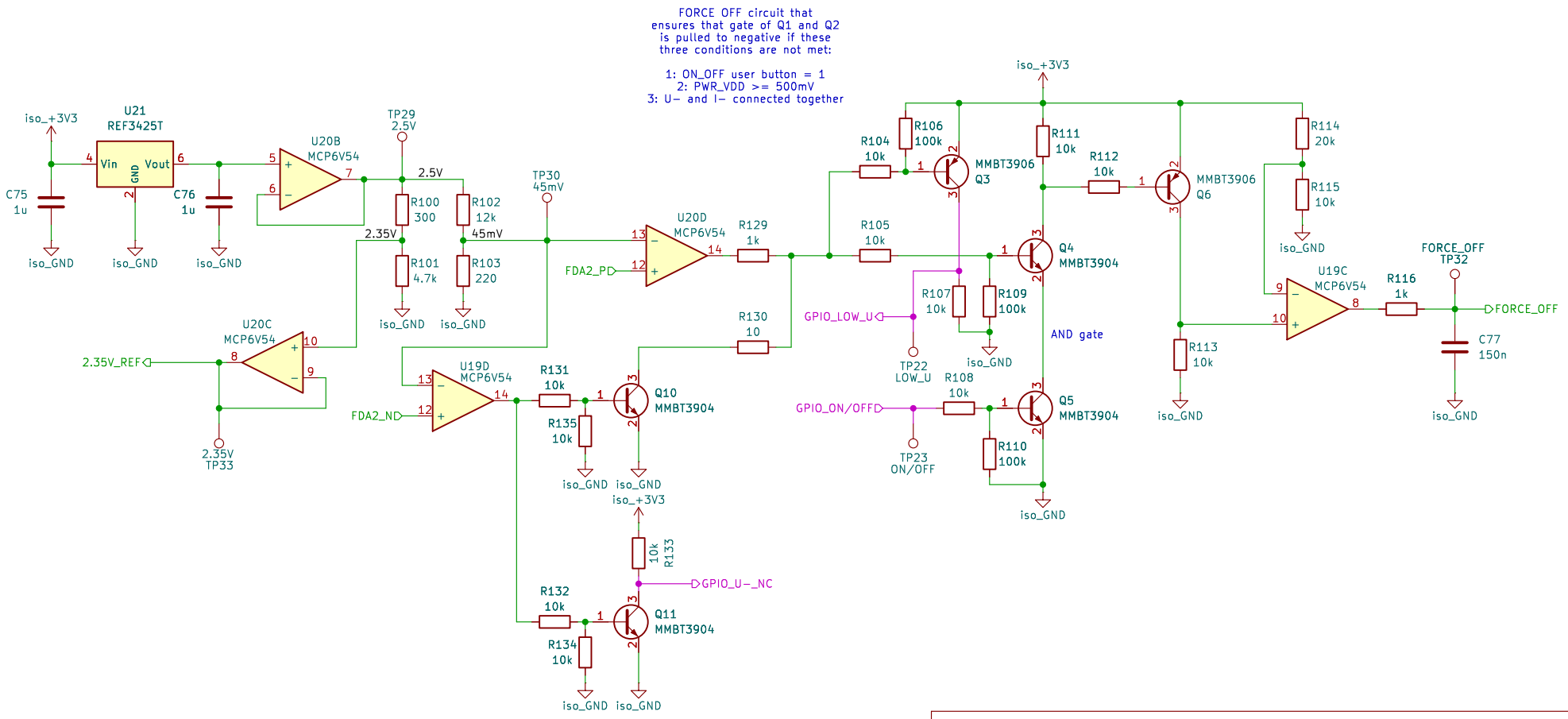

Sheet: /Force_OFF_low_U_protection_2.5V_REF/
File: Force_OFF_Circuit.kicad_sch

Title:

Size: A4	Date:	Rev:
KiCad E.D.A. 9.0.6		Id: 11/12

MASTER MCU – STM32F091RCT6TR

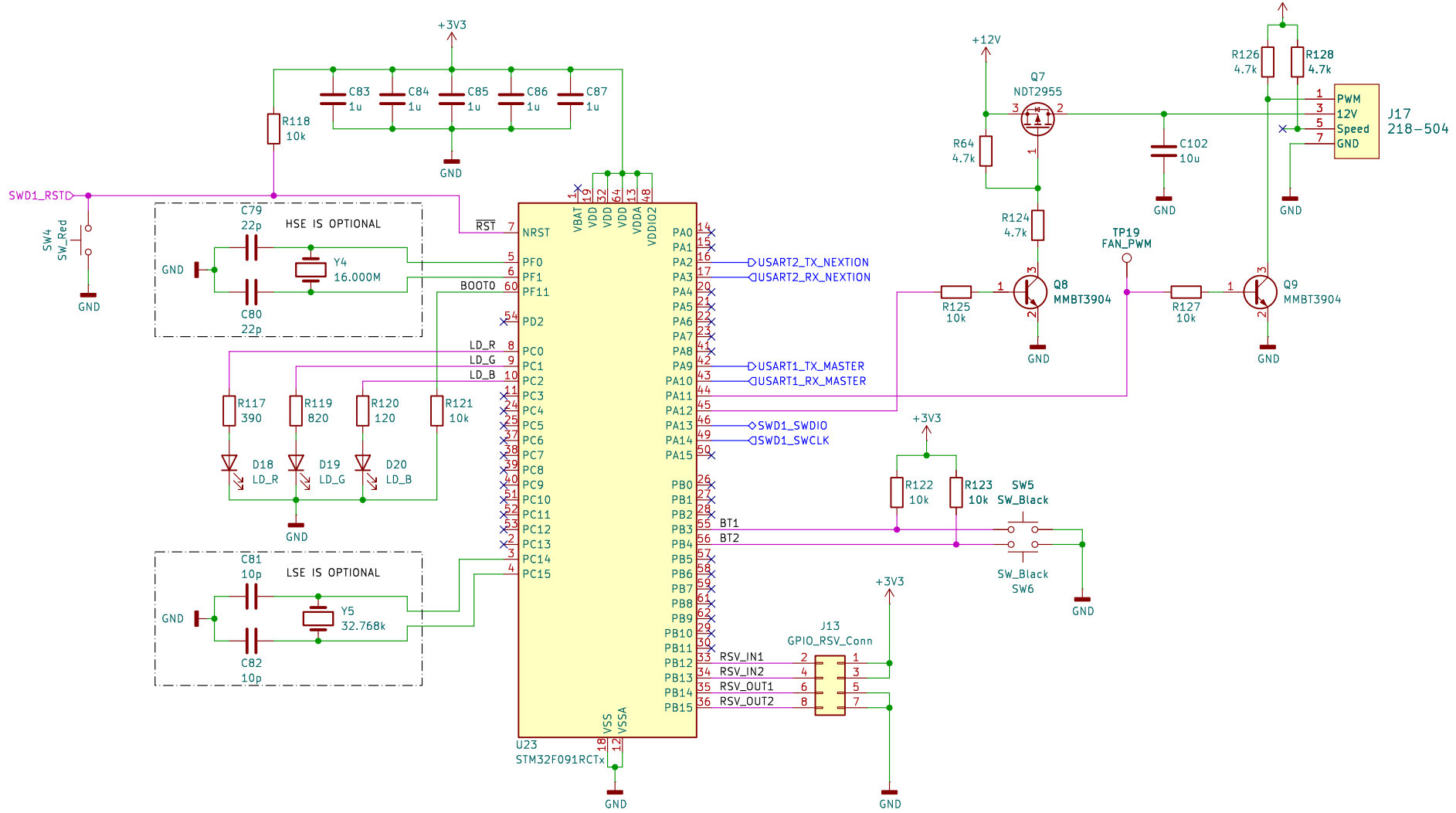

Sheet: /MCU_STM32F091RCT6/
File: MCU_STM32F091RCT6.kicad_sch

Title:

Size: A4	Date:	Rev:
KiCad E.D.A. 9.0.6		Id: 14/12